1” Thermocouple Ball Valve with Union/Butterfly Handle(M-F)



TECHNICAL DATA SHEET	
Product Name	1” Thermocouple Ball Valve with Union/Butterfly Handle M-F
Temperature Class	-10 °C / +100 °C
Pressure Class	PN40
Intended Use	Plumbing Systems
Standard	EN 13547

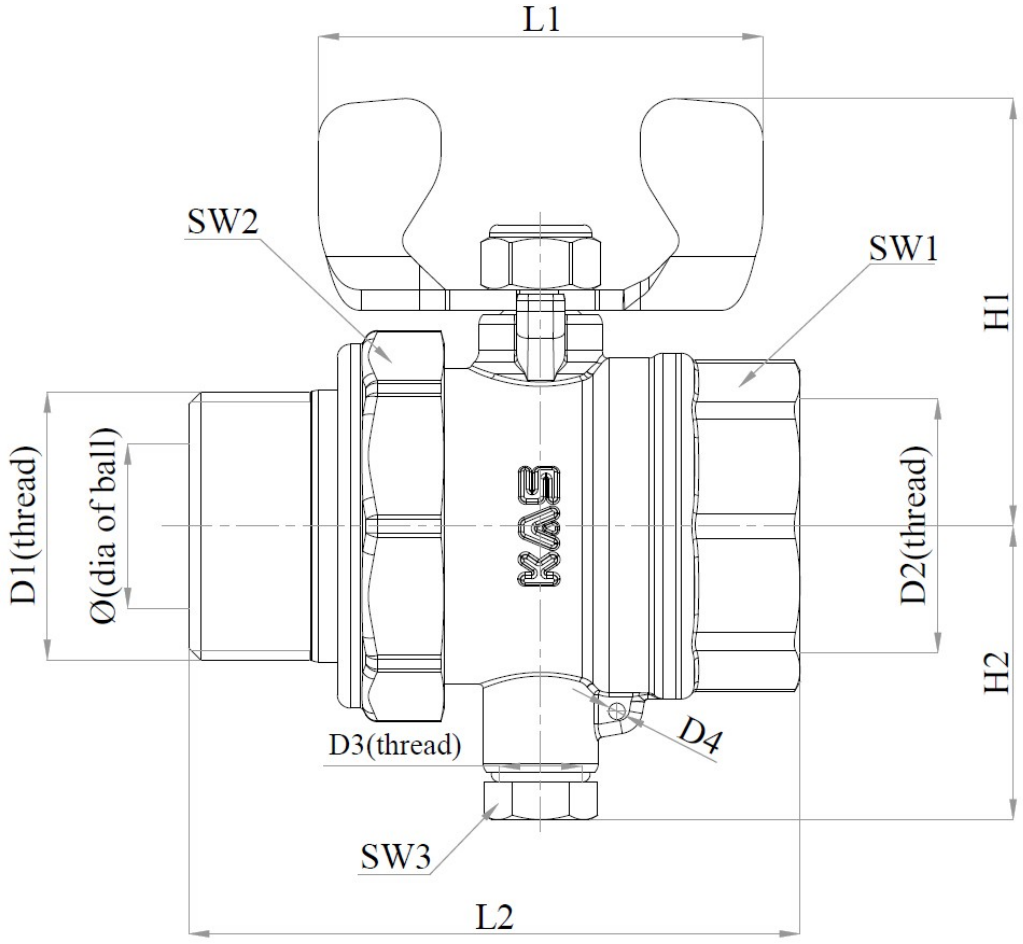

Dimensions are in "milimeter

R00T02/110822/1-9-A-32

CODE	DN	L1	L2	D1 (thread)	D2 (thread)	D3 (thread)	D4	SW 1	SW 2	SW3	H1	H2	Ø (dia of ball)
08.07.452	25	56,5	74,3	1”	1”	M10x1	Ø2	38	45	12	51	35	20

1” Thermocouple Ball Valve with Union/Butterfly Handle(M-F)

PART NAME	MATERIAL
Body	Brass (CW617N)/(CW614N)
Body Cover	Brass (CW617N)/(CW614N)
Ball	Brass (CW617N)/(CW614N)
Union	Brass (CW617N)/(CW614N)
Nut	Brass (CW617N)/(CW614N)
Plug	Brass (CW617N)/(CW614N)
Spindle	Brass (CW617N)/(CW614N)
Orings	NBR
Spindle Seal	PTFE (TEFLON)
Ball Seal	PTFE (TEFLON)
Union Seal	NBR
Handle	Steel

SURFACE	
Body	Nickel Plated
Body Cover	Nickel Plated
Ball	Nickel + Chrome Plated
Union	Nickel Plated
Nut	Nickel Plated
Plug	Nickel Plated
Handle	Plastic(Different Color Options)

INSTALLATION and OPERATING INSTRUCTION

1- Do not unpack the valve until installation to prevent falling of any unwanted substance that may affect the working of valve.

2- Take measures against any possible damage that may occur during transport and shipment.

3- Clean away every unwanted substance in your system before installation.

4- Valve should be off position while installing.

5- Be careful that the thread length of the part that will be installed to the valve will not be too longer or too shorter than the thread length of the valve.

6- While installing, grab the valve by the appropriate tool from the across flats where you'll install it.

7- During installation do not use excessive adhesive or any unsuitable substance.

8- Use the valve fully open or fully closed position.

9- Do not paint the valve. Do not expose the valve with abrasive chemicals.

10- Do not use any other tools for opening or closing the valve and do not remove the handle.

11- In case of any damage or disorder valve should be changed by authorities.

12- Complying with the installation and usage instruction is compulsory. Otherwise, the product will be out of guarantee.

13- Do not forget to get the document of guarantee. This document is valid only with the related bill.

KASPA DIŞ TİC. A.Ş.
Necip Fazıl Mah. Sağdıç Sok No:4 Ümraniye / İSTANBUL
Phone: +90 216 527 15 27
Fax: +90 216 499 74 76
marketing@kas.com.tr
www.kas.com.tr